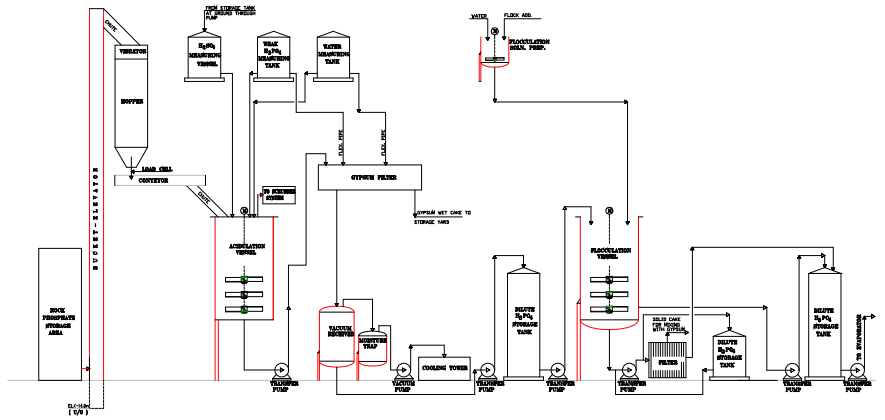

PROCESS FLOW DIAGRAM FOR DCP PLANT

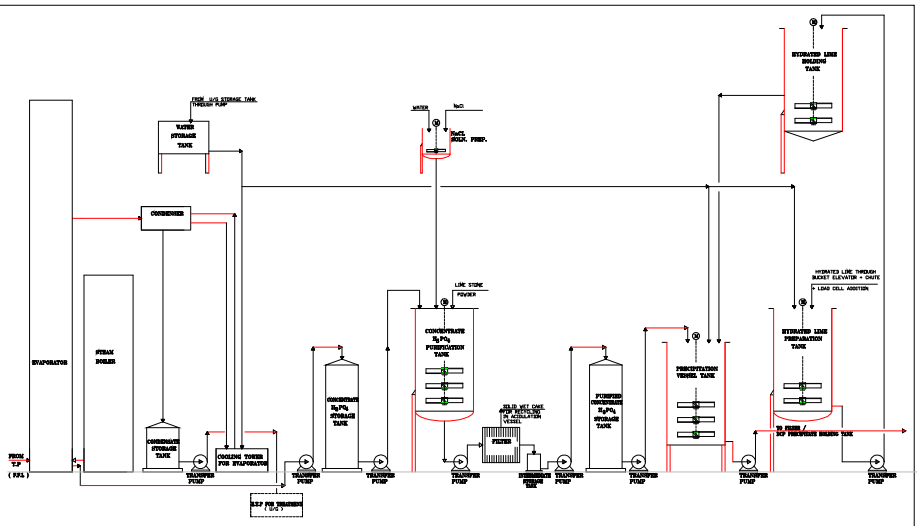

PROCESS FLOW DIAGRAM

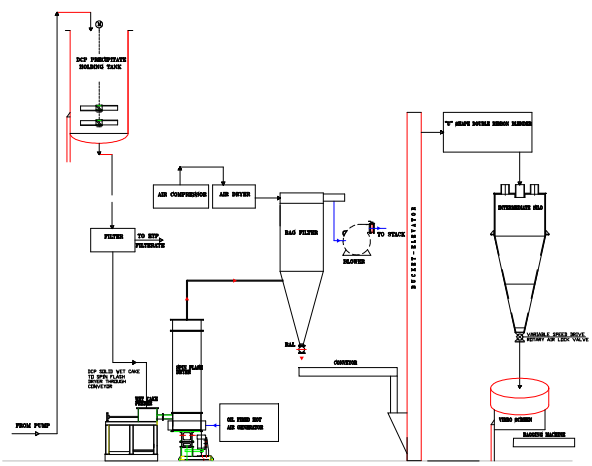

PROCESS FLOW DIAGRAM